Ecoflam

www.ecoflam-burners.com

TS RANGE

GAS, LIGHT OIL, HEAVY OIL AND DUAL FUEL

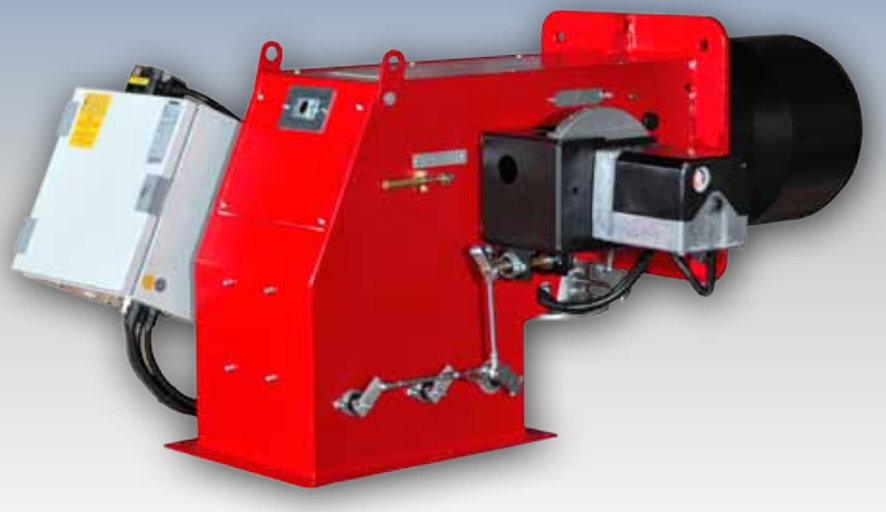

DUOBLOCK BURNERS FROM 230 TO 34000 kW

Our proposal

Ecoflam offers a full range of blown air pressure jet burners granting high efficiency and reliable operation with significant energy savings. All models feature extreme ease of installation maintenance and flexible boiler–burner matching.
All products are conform to CE standards and are manufactured in accordance with ISO 9001(quality management system), ISO 14001 (environmental management) and OHSAS 18001 (occupational health and safety management).

Our expertise

Thanks to its strong attitude in customization, besides its wide range of standard burners for all fuels, Ecoflam boasts many different solutions for different applications.

For more than 40 years, Ecoflam has been working continuously on new developments and the optimisation of existing products. The Ecoflam philosophy of continuous development, implemented in our laboratories, allows us to go forward and produce better results, such as the reduced NOx level emissions.

HEATING | INCINERATORS & WASTE | AGRICULTURE | ASPHALT & BUILDING | TEXTILE DRYING | FOOD PRODUCTION | WOOD BOILERS | CHEMICAL PLANTS | ENGINEERING | PLANT MODERNIZATION

Our worldwide network

Manufacturing is carried out in the factory of Resana (Treviso - Italy) and products are distributed worldwide thanks to a wide network of partners. In fourty years, Ecoflam has been capable to build loyal partnerships and today can count on reliable Partners in more than 60 Countries.
You can fully trust in our partners, they distribute Ecoflam products in their Countries of competence, they have good knowledge of the products, they are well trained under the technical point of view and they carry out commissioning and service by keeping constantly in touch with the headquarter.

Index

Burner designation

RANGE
BLU: gas
MAIOR: light oil
OILFLAM: heavy oil
MULTICALOR: dual fuel (gas/light oil)
MULTIFLAM: dual fuel (gas/heavy oil)

OPERATION TYPE
AB = 2 stages
PR = 2 stage progressive mechanical
PRE = 2 stage progressive electronic

MULTICALOR TS 1200.1 PR LN TC

MODEL SIZE
Gas: in **kW**
Oil and dual fuel: in **kg/h**

COMBUSTION TYPE
- = Low NOx class 2
LN = Low NOx class 3

COMBUSTION HEAD
TC = short
TL = long

Gas train designation

VALVE MANUFACTURER
D: Dungs
K: Kromschröder
S: Siemens

BURNER OPERATION TYPE
1: one stage
2: two stages and progressive

MINIMUM GAS PRESSURE SWITCH ARRANGEMENT
PS1: Single min. gas pressure switch before first valve
PS2: Single min. pressure switch between the two valves
PS3: Two min. gas pressure switches, before and between the valves

GT - S2 - VGD40 - DN80 - BLU/MULTI PS2

MODEL TYPE *(Examples)*
MBDLE415: MultiBloc model MB-DLE 415
VGD20503: Siemens model VGD 20.503
VCS240: Kromschröder model VCS240

VALVE NOMINAL DIAMETER *(Examples)*
Threaded connection:
RP40: Rp 1”1/2
RP50: Rp 2”
Flanged connection:
DN65: DN65
DN125: DN125

GAS TRAIN MATCHING BURNER
BLU/MULTI: Models matching BLU-MULTICALOR-MULTIFLAM range

RANGE OVERVIEW

BLU

Gas - Low NOx Class 2 (< 120 mg/kWh) and Class 3 (< 80 mg/kWh)

BLU TS 500.1 Low NOx	230 ... 500 kW
BLU TS 1000.1	280 ... 875 kW
BLU TS 1500.1 Low NOx	300 ... 1550 kW
BLU TS 2000.1	414 ... 2150 kW
BLU TS 3000.1	630 ... 3000 kW
BLU TS 4000.1	875 ... 3900 kW
BLU TS 6000.1	1500 ... 5800 kW
BLU TS 8000.1	2000 ... 8500 kW
BLU TS 10000.1	2500 ... 10500 kW
BLU TS 12000.1	2700 ... 13000 kW
BLU TS 18000.1	4000 ... 17000 kW
BLU TS 23000.1	5500 ... 22000 kW
BLU TS 34000.1	6000 ... 34000 kW

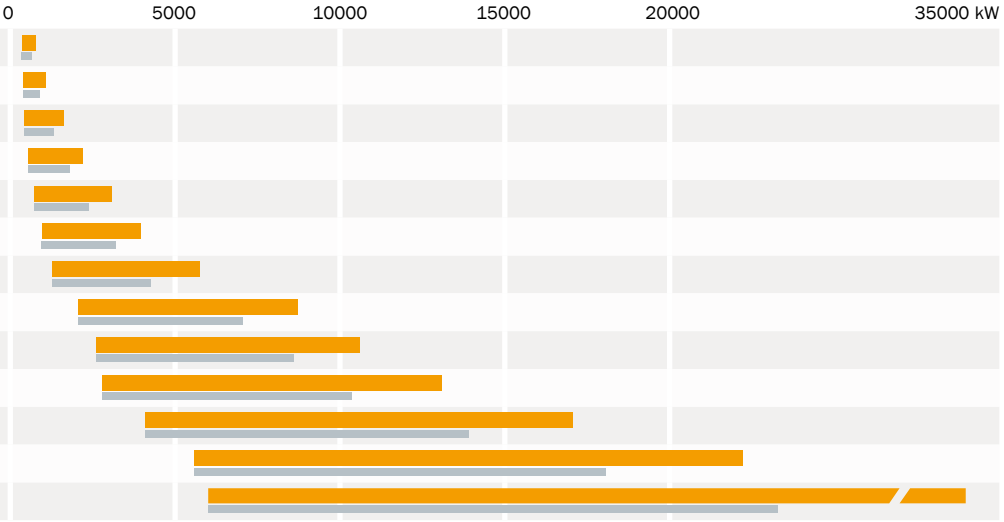

Standard version T_{air} = 20 °C Hot air version T_{air} = 200 °C

MAIOR

Light oil

Oil pump on board	
MAIOR TS 200.1	710 ... 2372 kW
MAIOR TS 300.1	1000 ... 3000 kW
MAIOR TS 400.1	1300 ... 3900 kW
MAIOR TS 600.1	1795 ... 5800 kW
Separated oil pumping unit	
MAIOR TS 800.1	2750 ... 8500 kW
MAIOR TS 1000.1	3300 ... 10500 kW
MAIOR TS 1200.1	4367 ... 12500 kW
MAIOR TS 1800.1	5700 ... 17000 kW
MAIOR TS 2300.1	6500 ... 22000 kW
MAIOR TS 3400.1	7000 ... 34000 kW

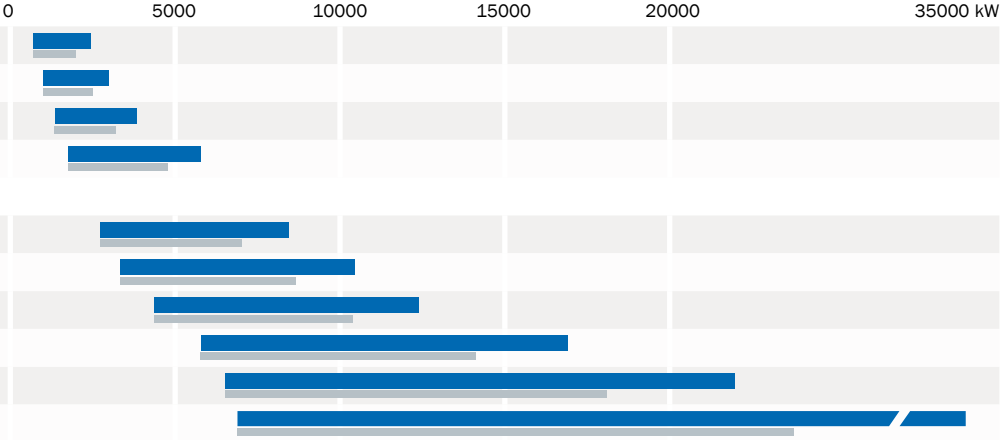

Standard version T_{air} = 20 °C Hot air version T_{air} = 200 °C

OILFLAM

Heavy oil

Oil pump on board	
OILFLAM TS 200.1	710 ... 2372 kW
OILFLAM TS 300.1	1000 ... 3000 kW
OILFLAM TS 400.1	1300 ... 3900 kW
OILFLAM TS 600.1	1795 ... 5800 kW
Separated oil pumping unit	
OILFLAM TS 800.1	2750 ... 8500 kW
OILFLAM TS 1000.1	3300 ... 10500 kW
OILFLAM TS 1200.1	4367 ... 12500 kW
OILFLAM TS 1800.1	5700 ... 17000 kW
OILFLAM TS 2300.1	6500 ... 22000 kW
OILFLAM TS 3400.1	7000 ... 34000 kW

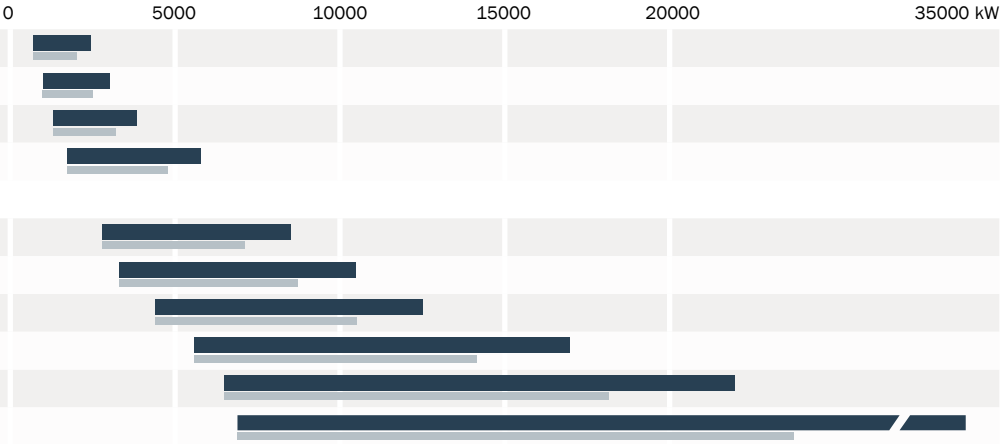

Standard version T_{air} = 20 °C Hot air version T_{air} = 200 °C

MULTICALOR

Natural gas/light oil

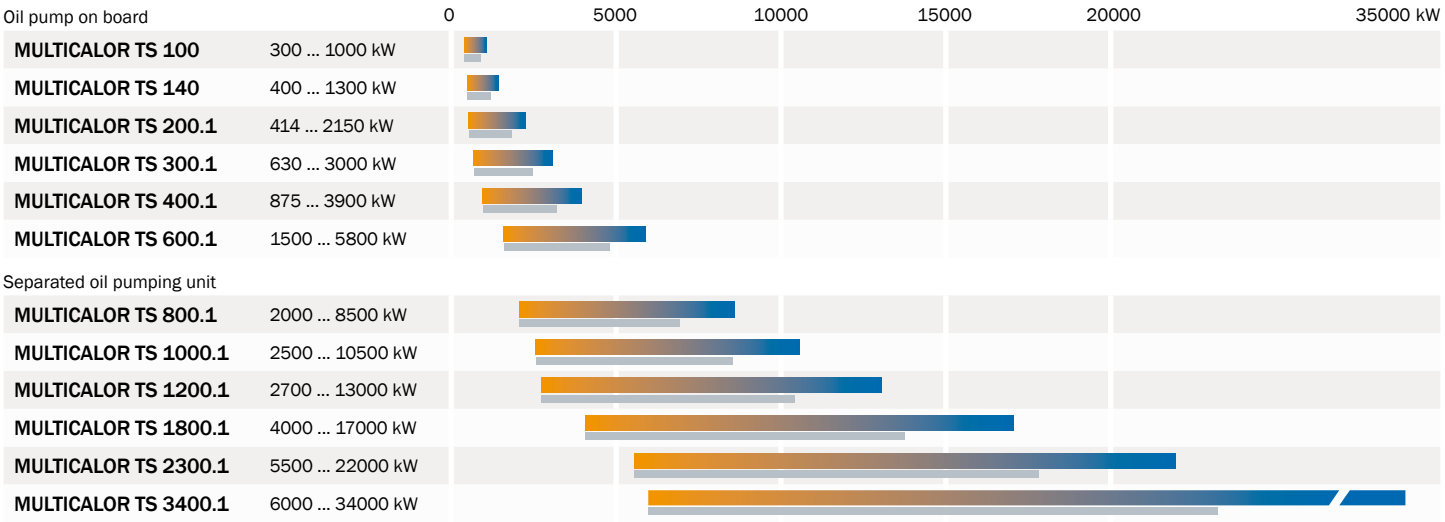

Standard version T_{air} = 20 °C Hot air version T_{air} = 200 °C

MULTIFLAM

Natural gas/heavy oil

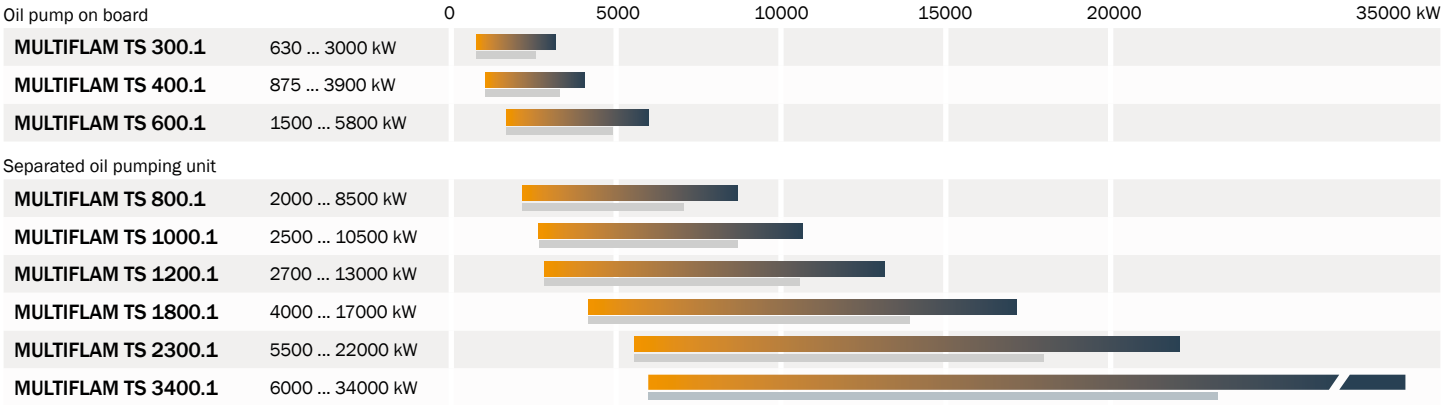

Standard version T_{air} = 20 °C Hot air version T_{air} = 200 °C

All the benefits of the separate ventilation

In contrast to monoblock burners, duoblock burners are made up of two units, or blocks, as the name implies: the burner head with the air inlet, and the separately-installed fan; the two units are connected via an air duct.
The separate installation of the fan offers several benefits:

- the fan can be installed in a separate room, for instance in the cellar; this results in considerably lower noise levels in the boiler room; when the fan is installed in the same room, a fan enclosure can be used to achieve optimum sound absorption, without inhibiting access to the burner;
- less space required in front of the boiler and in the combustion chamber;
- individual fan layout with optimum adaptation of the fan characteristic curve to suit the pressure ratio of the heat generator; this guarantees pulsation-free and stable burner behaviour, even on heat generators with high resistance on the exhaust side;
- combustion air can be pre-heated to increase installation efficiency;
- lower weight loading on the boiler front.

Maximum flexibility for highly customized solutions

Thanks to their extreme flexibility and ease of use TS burners are suitable for all types of installation from 200 kW up to 34 MW. Burners can be assembled with air duct connection in different layouts in order to meet a wide range of specifications in terms of performance and overall dimensions.
Terminal block configuration is provided as standard; versions with integrated control panel are available on request.

Low maintenance, high reliability

All TS range models feature easy maintenance. Access to the combustion head and to the internal components is allowed from the housing top cover with a single operation, without removing the burner from the boiler.
The clear layout allows rapid cleaning of the mechanical components, keeping the installation always in good conditions.

Hot air configuration

TS range can run in standard configuration with air up to 60°C.
Versions suitable to work with pre-heated combustion air up to 200°C can be used in order to achieve greater values of efficiency.

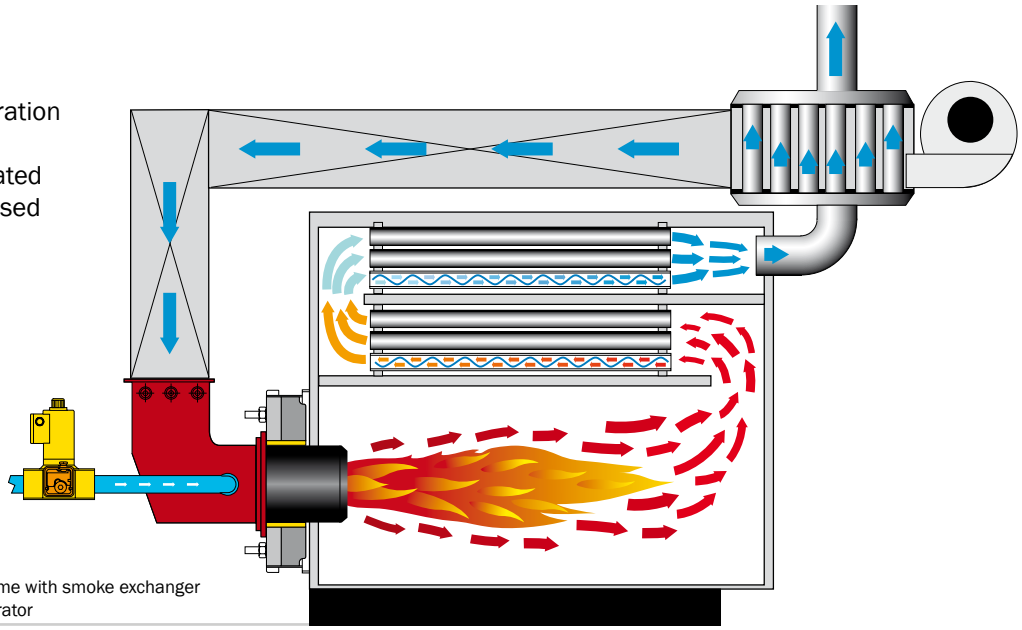

Installation scheme with smoke exchanger and heat recuperator

CONFIGURATIONS, VARIANTS AND ACCESSORIES

Standard configuration:
loose version with
derivative panel

IP55 Switch cabinet
configuration:
version with assembled
or remote switch cabinet

Pre-heating
pump station

Separate ventilator

Gas train unit

Modulation Kit

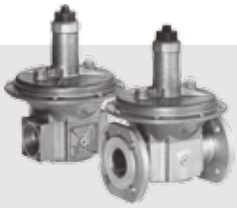

Gas governor/filter
Compulsory EN676

Max pressure switch

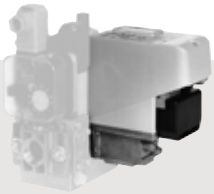

Tightness control
Compulsory EN676
(over 1200 kW)

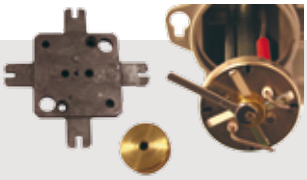

LPG/Natural gas

ELECTRONIC VERSION WITH BMS

INVERTER SYSTEM
O_2-CO TRIM CONTROL
MONITORING APPLICATION

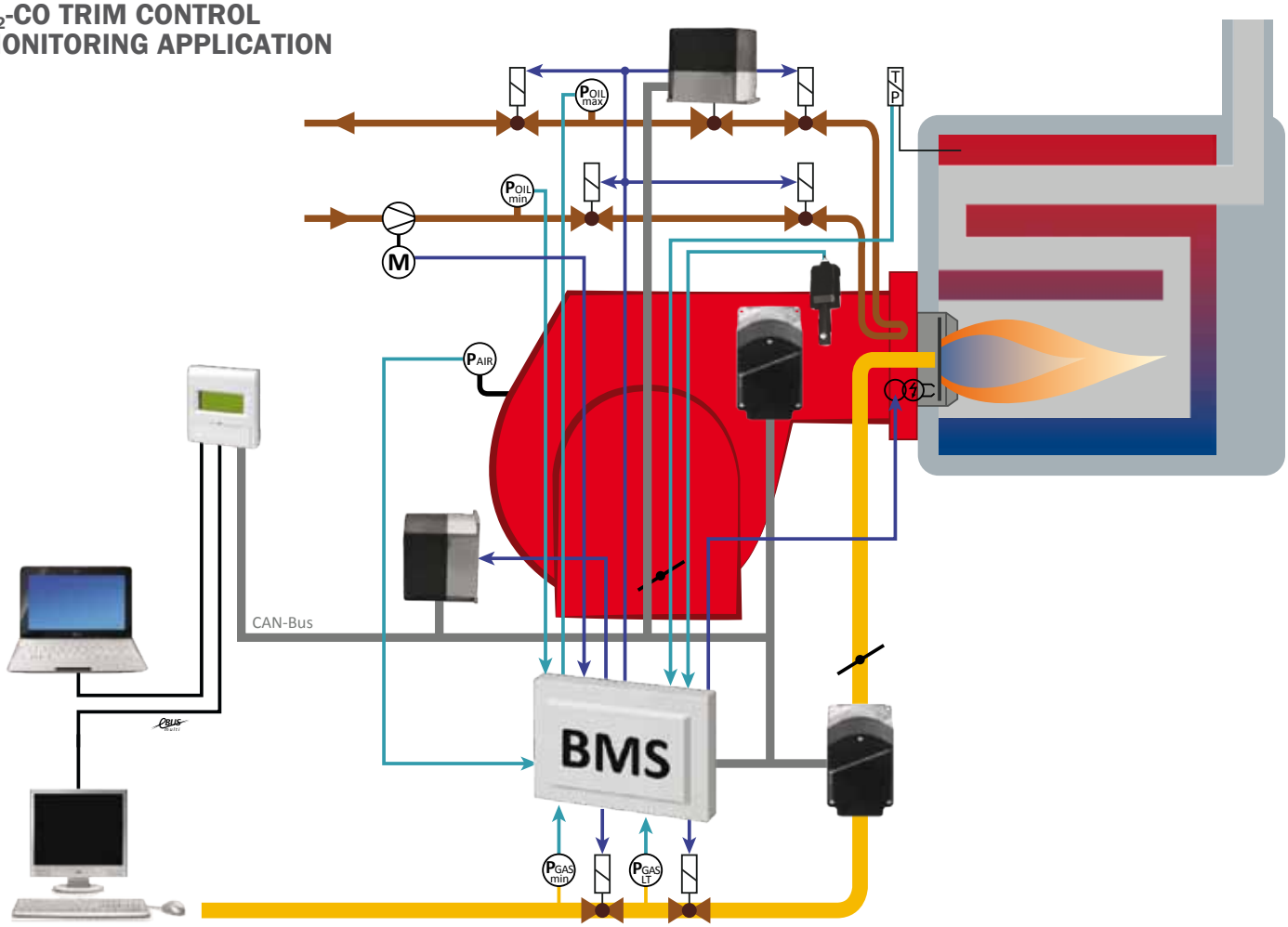

BMS (Burner Management System) allows to improve performance and efficiency of modern firing installation. This system is designed to be matched with an extensive range of components such as flame, temperature and pressure sensors, gas valves, variable speed fan motors and oxygen control that can be managed from different bus interfaces

	Turndown ratio			Kit VSD-inverter	Kit O_2-CO trim	Additional functions
	standard	with inverter	oil side			
BLU	1÷6	1÷8	-	Kit	Kit	Flame monitoring sensors Communication interfaces Display interface
MAIOR	-	1÷5	1÷4	Kit	Kit	
OILFLAM	-	1÷4	1÷4	Kit	Kit	
MULTICALOR	1÷6	1÷8	1÷4	Kit	Kit	
MULTIFLAM	1÷6	1÷8	1÷4	Kit	Kit	

How to choose the correct ventilator

According to the application output or the fuel flow rate we need to calculate the **air needed** considering the following data:
- Output / Fuel air flow;
- Temperature of combustion air;
- Backpressure in the combustion chamber;
- Sea level altitude.

In order to dimension the correct ventilator the following calculation has to be made:
1. Air flow needed
2. Pressure needed

First of all we need to calculate the air flow needed in function of Nm^3/h for gas or kg/h for oil and multiply it for the following suggested coefficients:
Natural gas: K=12
Light oil: K=15,7
Heavy oil: K=15

Example:
1000 Nm^3/h of gas
The quantity of air will be:
1000 [Nm^3/h] x 12 = 12000 m^3/h of air

This value must be adjusted according to the following:
1. temperature of combustion air (standard 20° C; see table for different temperature);
2. sea level (refer to the table for correction factors);
3. air loss of the connecting pipes between burner head and ventilator (estimated to 5%).

Results will be the following for an installation at 500 m from the sea level and with air at 50°C:
12000 [m^3/h] x 1,05 / 0,855 = 14737 m^3/h

Total air pressure:
to finalize the calculation we shall consider the following factors:
- head loss of the burner* (see following pages);
- backpressure in the combustion chamber;
- additional loss given from accessories like heat exchanger, filters, ...

*: pressure losses calculated at sea level at 20°C; the value must be adjusted according to the correction factor

1000 Nm^3/h gas for BLU 10000.1
10000 kW (L.C.V. 8570 kcal/Nm^3)
- head loss = **35/0,855 = 42 mbar**
- backpressure installation = **15 mbar**
- additional exchanger = **15 mbar**
Total: 42+15+15 = 72 mbar

Final data achieved for selecting the ventilator:
1. Air needed = 14737 m^3/h
2. Pressure = 72 mbar

Correction factors

Temp. (°C)	Air density (kg/m)	Sea level altitude (m)												
		0	250	500	750	1000	1250	1500	1750	2000	2250	2500	2750	3000
0	**1,293**	1,073	1,042	1,012	0,982	0,954	0,926	0,899	0,873	0,847	0,823	0,799	0,775	0,753
5	**1,270**	1,054	1,023	0,993	0,965	0,936	0,909	0,883	0,857	0,832	0,808	0,784	0,761	0,739
10	**1,247**	1,035	1,005	0,976	0,947	0,920	0,893	0,867	0,842	0,817	0,793	0,770	0,748	0,726
15	**1,226**	1,017	0,988	0,959	0,931	0,904	0,878	0,852	0,827	0,803	0,780	0,757	0,735	0,714
20	**1,205**	1,000	0,971	0,943	0,915	0,888	0,863	0,837	0,813	0,789	0,766	0,744	0,722	0,701
25	**1,185**	0,983	0,955	0,927	0,900	0,874	0,848	0,823	0,799	0,776	0,754	0,732	0,710	0,690
30	**1,165**	0,967	0,939	0,911	0,885	0,859	0,834	0,810	0,786	0,763	0,741	0,720	0,699	0,678
40	**1,128**	0,936	0,909	0,882	0,857	0,832	0,807	0,784	0,761	0,739	0,717	0,697	0,676	0,657
50	**1,093**	0,907	0,881	0,855	0,830	0,806	0,782	0,760	0,738	0,716	0,695	0,675	0,655	0,636
60	**1,060**	0,880	0,854	0,829	0,805	0,782	0,759	0,737	0,715	0,695	0,674	0,655	0,636	0,617
80	**1,000**	0,830	0,806	0,782	0,760	0,737	0,716	0,695	0,675	0,655	0,636	0,618	0,600	0,582
100	**0,946**	0,786	0,763	0,740	0,719	0,698	0,678	0,658	0,639	0,620	0,602	0,585	0,567	0,551
150	**0,834**	0,693	0,672	0,653	0,634	0,615	0,598	0,580	0,563	0,547	0,531	0,515	0,500	0,486
200	**0,746**	0,619	0,601	0,584	0,567	0,550	0,534	0,519	0,504	0,489	0,475	0,461	0,448	0,434
250	**0,675**	0,560	0,544	0,528	0,513	0,498	0,483	0,469	0,456	0,442	0,429	0,417	0,405	0,393
300	**0,616**	0,511	0,496	0,482	0,468	0,454	0,441	0,428	0,416	0,404	0,392	0,380	0,369	0,359

PRESSURE DROPS

Burner head AIR pressure drop

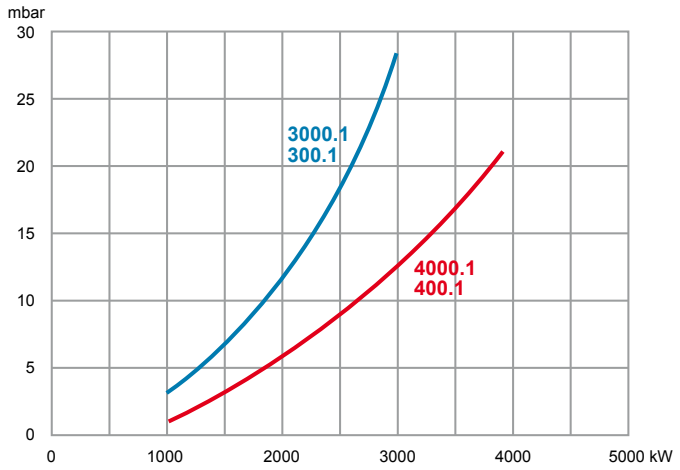

Burner head GAS pressure drop

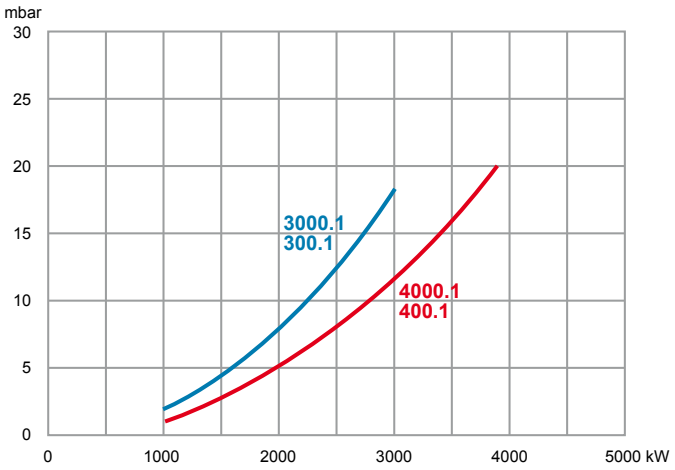

Pressure drop on AIR side

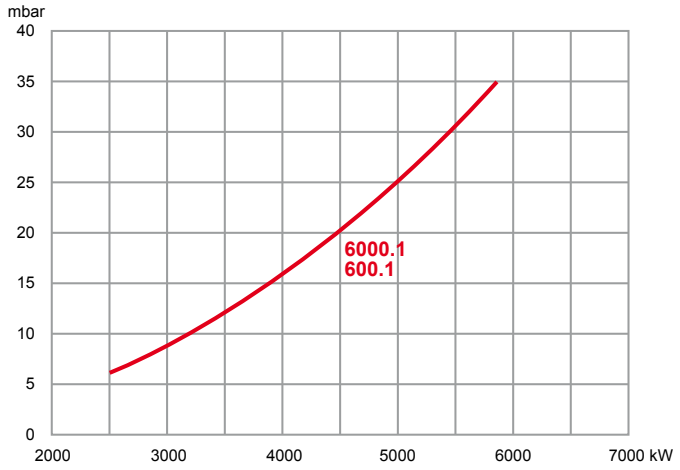

Pressure drop on GAS side

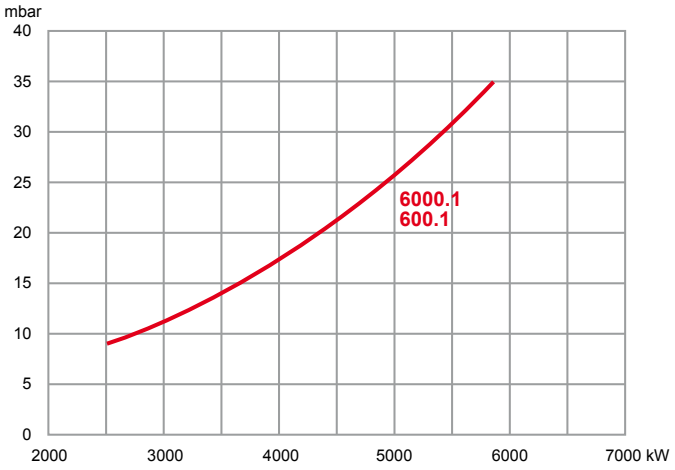

Pressure drop on AIR side

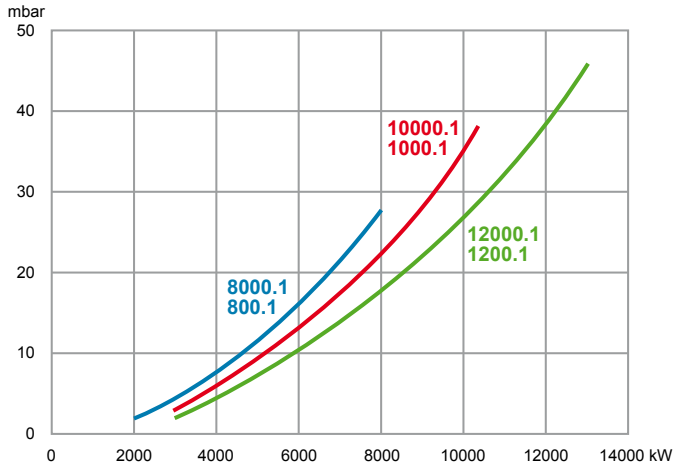

Pressure drop on GAS side

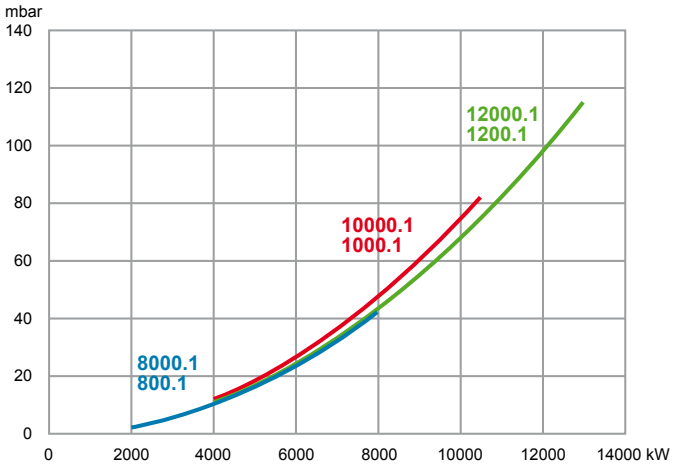

PRESSURE DROPS

Pressure drop on AIR side

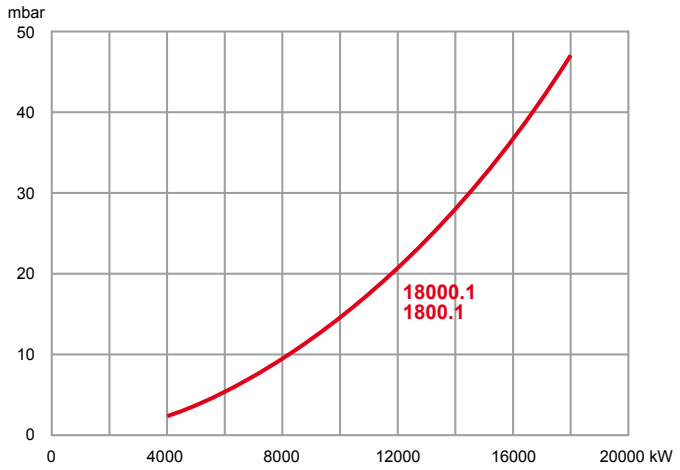

Pressure drop on GAS side

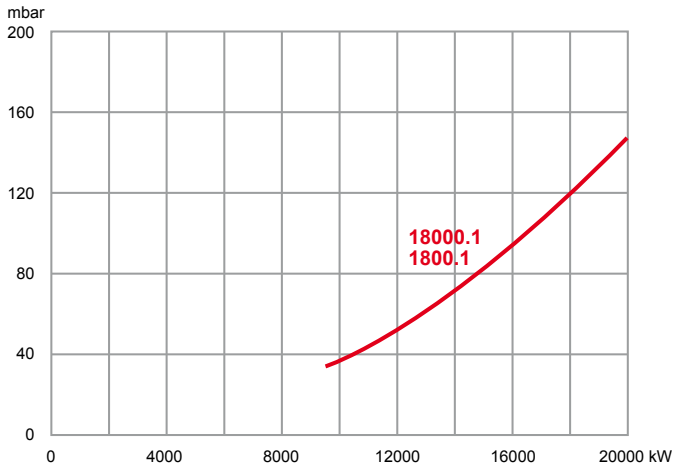

Pressure drop on AIR side

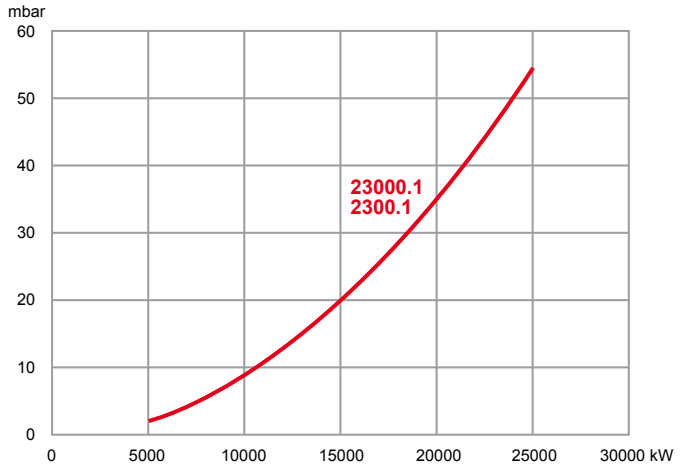

Pressure drop on GAS side

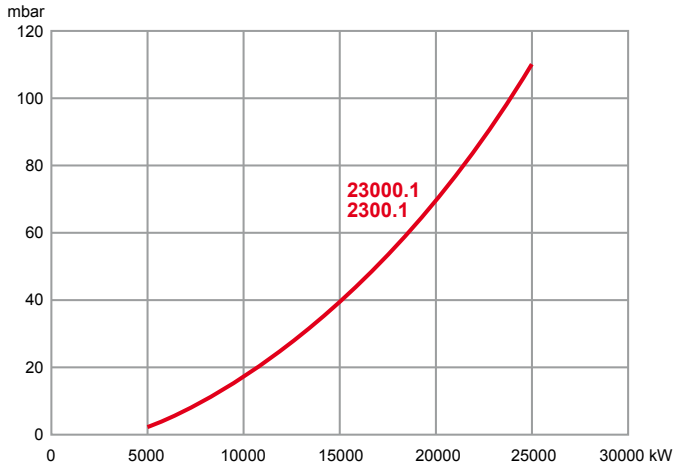

Pressure drop on AIR side

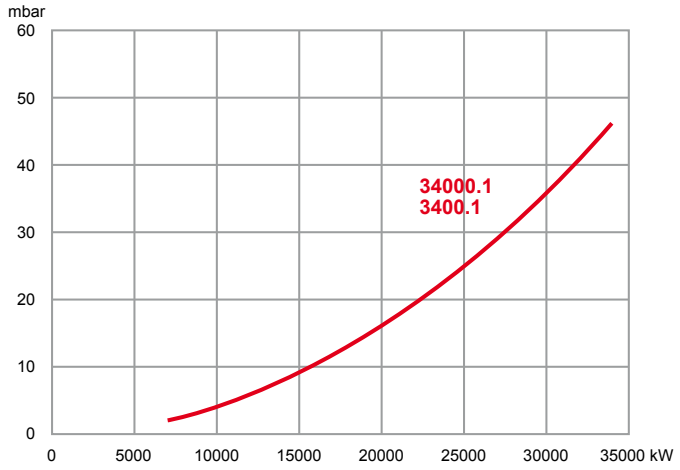

Pressure drop on GAS side

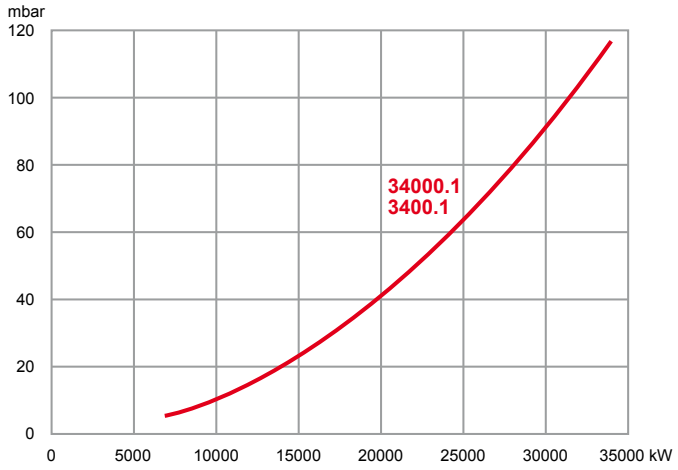

Burner body

Gas: **TS 500.1, TS 1000.1**
Oil and dual: **TS 100**

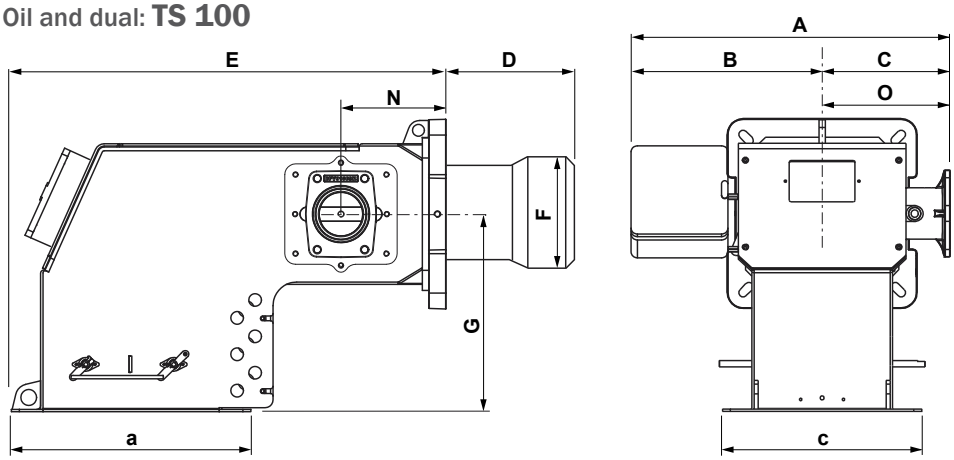

Connecting flange

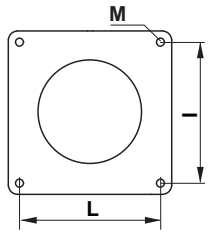

Gas: **TS 1500.1 ... 34000.1**
Oil and dual: **TS 140 ... 3400.1**

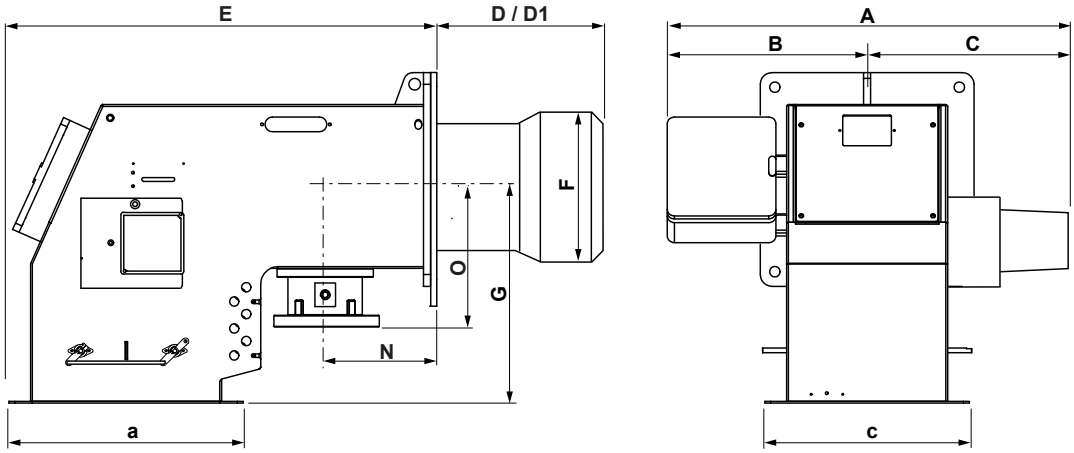

Connecting flange

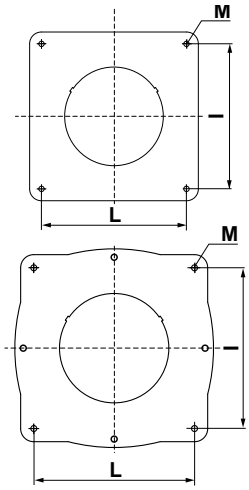

	A	B	C	D	D1	E	F	G	I	L	M	N	O
TS 500.1, 1000.1 TS 100	619	454	165	175	395	560	190	250	190	190	4x M10	140	165
TS 1500.1, 2000.1 TS 140, 200.1	922	444	478	345	545	710	270	375	270	270	4x M16	125	250
TS 3000.1, 4000.1 TS 300.1, 400.1	971	479	492	345	545	850	320	392	315	315	4x M16	190	250
TS 6000.1 TS 600.1	978	485	493	375	575	810	320	404	330	330	4x M16	195	250
TS 8000.1, 10000.1, 12000.1 TS 800.1, 1000.1, 1200.1	1170	540	630	470	-	1030	420...450	550	460	460	4x M20	195	232
TS 18000.1 TS 1800.1	1270	630	640	590	-	1480	550	670	620	620	8x M20	210	320
TS 23000.1 TS 2300.1	1530	800	730	510	-	1560	720	760	800	800	8x M20	220	412
TS 34000.1 TS 3400.1	1530	800	730	600	-	1560	720	760	800	800	8x M20	220	412

D: short head - D1: long head
Dimensions (in mm) make reference to the mechanical versions; data may vary according to the configuration and options installed

Air duct

Gas: **TS 500.1 ... 2000.1**
Oil and dual: **TS 100 ... 200.1**

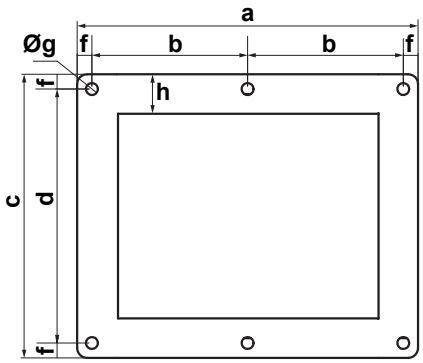

Gas: **TS 3000.1 ... 6000.1**
Oil and dual: **TS 300 ... 600.1**

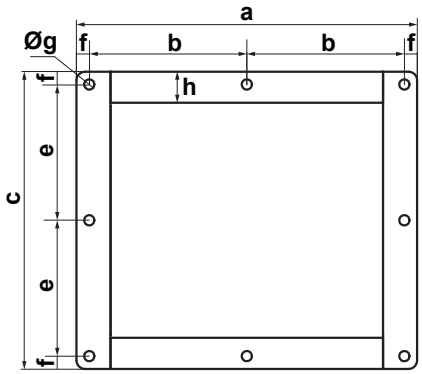

Gas: **TS 8000.1 ... 12000.1**
Oil and dual: **TS 800.1 ... 1200.1**

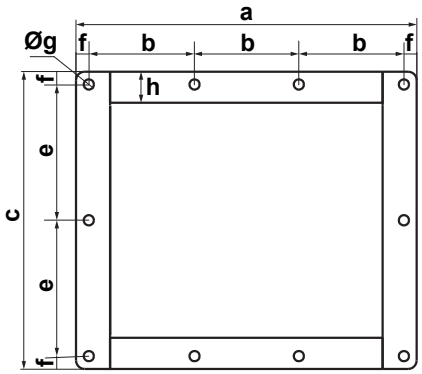

Gas: **TS 18000.1**
Oil and dual: **TS 1800.1**

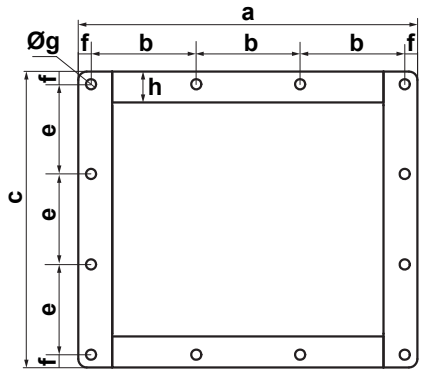

Gas: **TS 23000.1 ... 34000.1**
Oil and dual: **TS 2300.1 ... 3400.1**

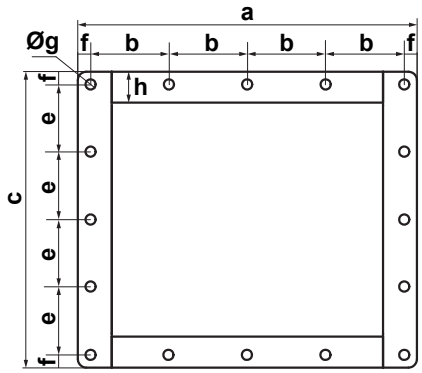

	a	b	c	d	e	f	Øg	h
TS 500.1, 1000.1 TS 100	303	136,5	252	222	-	15	6x R12	40
TS 1500.1, 2000.1 TS 140, 200.1	345	157,5	287	257	-	15	6x R12	40
TS 3000.1, 4000.1 TS 300.1, 400.1	400	185	349	-	159,5	15	8x R12	40
TS 6000.1 TS 600.1	470	220	361	-	165,5	15	8x R12	40
TS 8000.1, 10000.1, 12000.1 TS 800.1, 1000.1, 1200.1	557	173	474	-	218	19	10x R14	43
TS 18000.1 TS 1800.1	730	230,7	650	-	204	19	12x R14	43
TS 23000.1 TS 2300.1	930	223	828	-	197,5	19	16x R14	40
TS 34000.1 TS 3400.1	930	223	828	-	197,5	19	16x R14	40

Dimensions in mm

Gas train

VCS Kromschröder

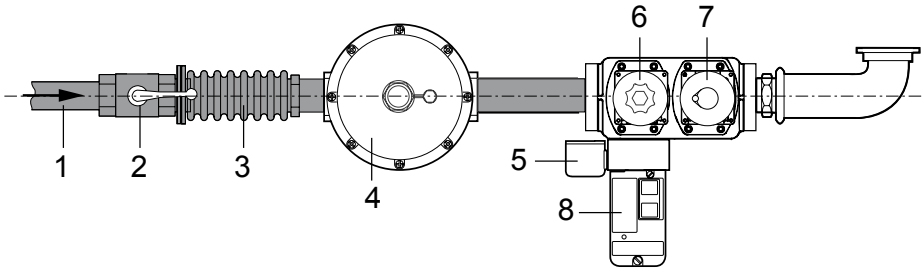

1 Main gas pipe
2 Ball valve
3 Antivibration coupling
4 Gas governor
5 Gas pressure switch
6 Safety gas valve
7 Working gas valve
8 Leakage control

VCS...

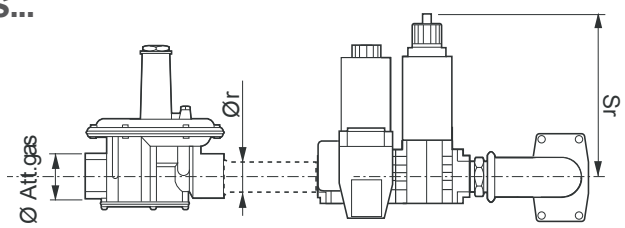

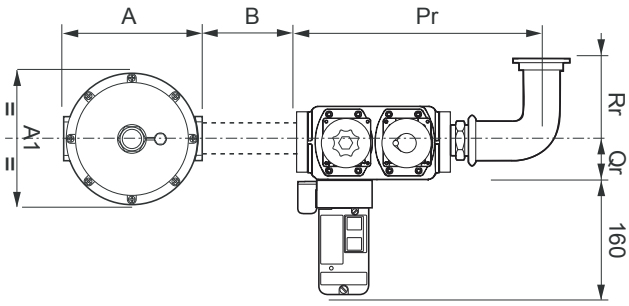

Gas: **TS 500.1, TS 1000.1**
Oil and dual: **TS 100**

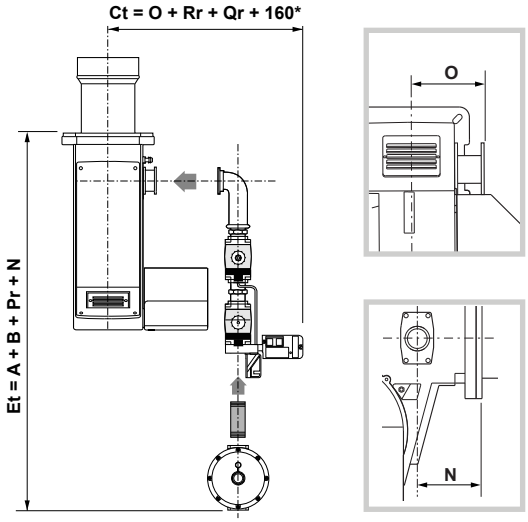

Gas: **TS 1500.1 ... 34000.1**
Oil and dual: **TS 140 ... 3400.1**

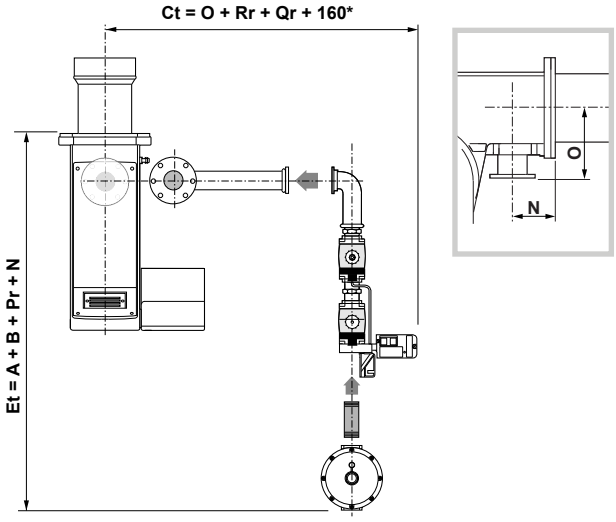

*: kit VPS

Note
In order to calculate the overall dimension of the burner complete with gas train (Et and Ct) you need to consider the dimensions of the gas train, choosen according to the inlet gas pressure, and the dimension of the connection pipe (if needed): see page 17.
If the value Et is lower than E, consider Et = E.

Gas train

VGD Siemens

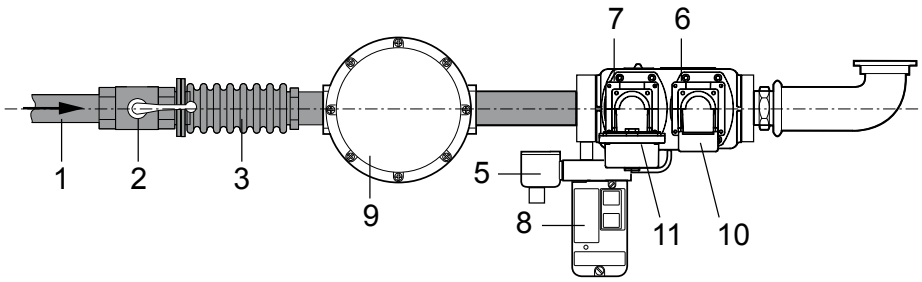

1 Main gas pipe
2 Ball valve
3 Antivibration coupling
4 Gas governor
5 Gas pressure switch
6 Safety gas valve
7 Working gas valve
8 Leakage control
9 Gas filter
10 Actuator
11 Actuator

VGD20...

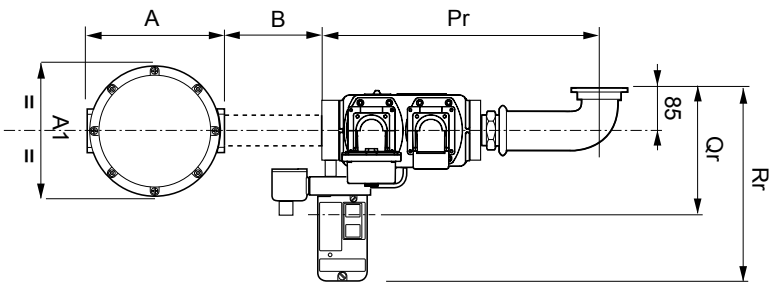

VGD40...

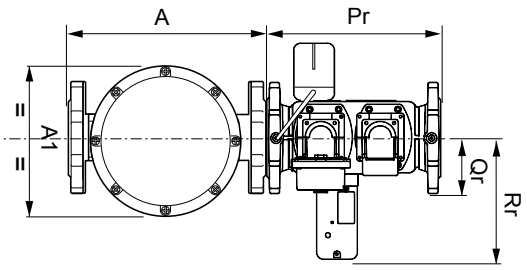

Gas: **TS 500.1, TS 1000.1**
Oil and dual: **TS 100**

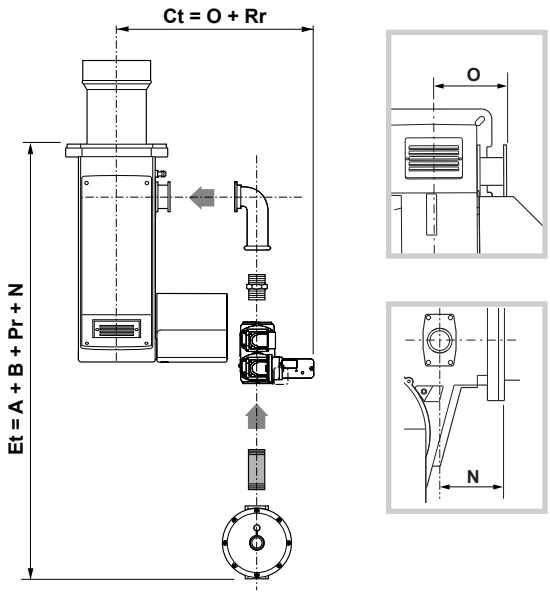

Gas: **TS 1500.1 ... 34000.1**
Oil and dual: **TS 140 ... 3400.1**

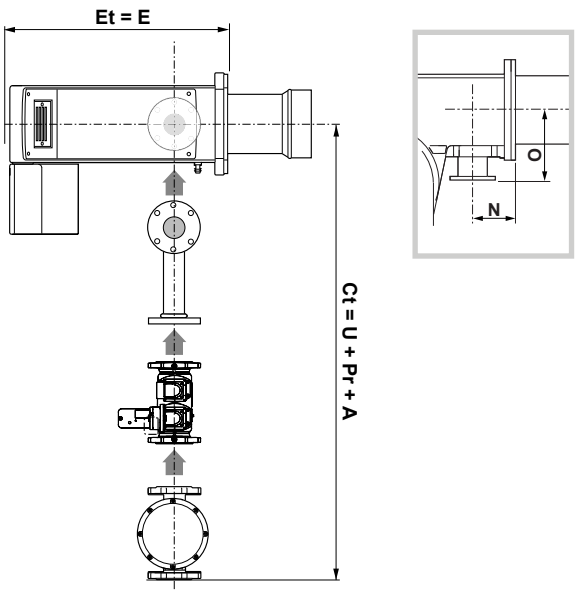

Note
In order to calculate the overall dimension of the burner complete with gas train (Et and Ct) you need to consider the dimensions of the gas train, choosen according to the inlet gas pressure, and the dimension of the connection pipe (if needed): see page 17.

Gas train connection pipe

VCS Kromschröder

Gas: TS 1500.1 ... 4000.1
Dual fuel: TS 140 ... 400.1

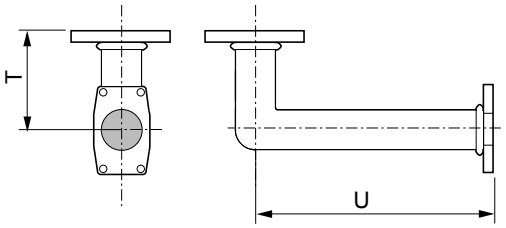

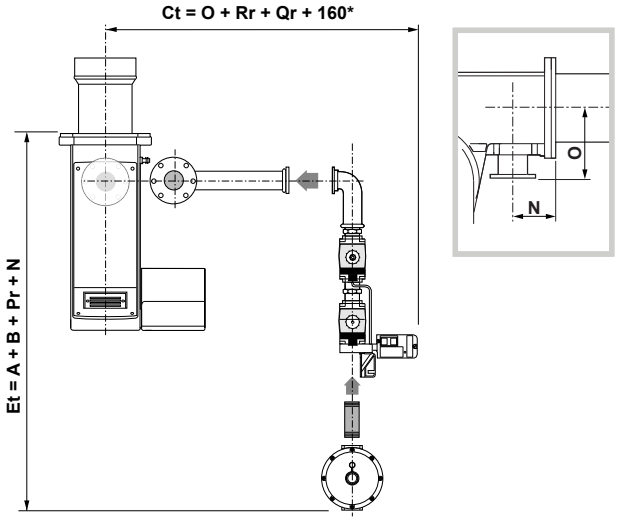

VGD Siemens

VGD20...
Gas: TS 1500.1 ... 6000.1
Dual fuel: TS 140 ... 600.1

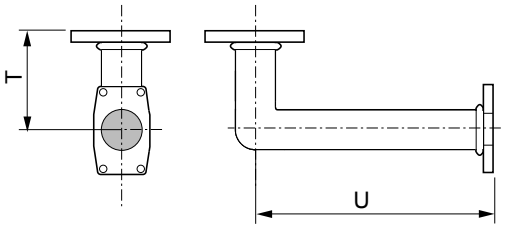

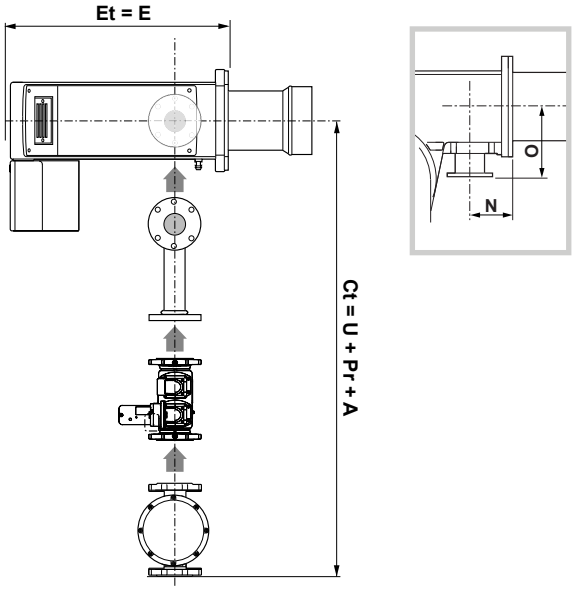

VGD40...
Gas: TS 1500.1 ... 34000.1
Dual fuel: TS 140 ... 3400.1

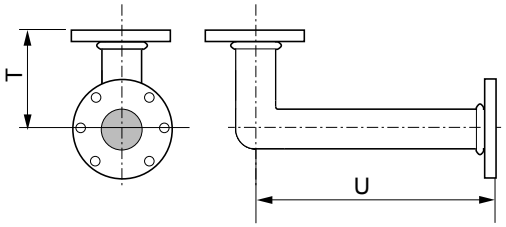

Matching

	Gas train model	GTCP Dimension			GT Dimension					Gas governor & filter / Filter	FGDR - Filter		
		T	U	V	Pr	Qr	Rr	Sr	Ør		A	A1	B
Gas: **TS 500.1, 1000.1** Dual fuel: **TS 100**	VCS-125	-	-	-	310	65	155	215	1”	FGDR-RP25	146	131	>100
	VCS-240				310	82	155	240	1”1/2	FGDR-RP40	194	178	>100
	VCS-350				372	95	155	250	2"	FGDR-RP50	260	225	>100
Gas: **TS 1500.1, 2000.1** Dual fuel: **TS 140, 200.1**	VCS-240	85	400	-	310	82	155	240	1”1/2	FGDR-RP40	194	178	>100
	VCS-240	85	400		310	82	155	240	1”1/2	FGDR-RP50	260	225	>100
	VCS-350	85	400		372	95	155	250	2"	FGDR-RP50	260	225	>100
	VGD20.503	85	400	-	450	185	315	-	2"	Filter 2"	186	186	>100
	VGD40.065	104	560	104	290	97	211	-	DN65	Filter DN65	290	212	-
	VGD40.080	125	560	125	310	102	218	-	DN80	Filter DN80	320	240	-
Gas: **TS 3000.1, 4000.1** Dual fuel: **TS 300.1, 400.1**	VCS-350	85	588	-	372	95	155	250	2"	FGDR-RP50	260	225	>100
	VGD20.503	85	588	-	450	185	315	-	2"	Filter 2"	186	186	>100
	VGD40.065	104	560	104	290	97	211	-	DN65	Filter DN65	290	212	-
	VGD40.080	125	560	125	310	102	218	-	DN80	Filter DN80	320	240	-
	VGD40.100	125	560	255	350	113,5	229	-	DN100	Filter DN100	380	280	-
Gas: **TS 6000.1** Dual fuel: **TS 600.1**	VGD20.503	85	588	-	450	185	315	-	2"	Filter 2"	186	186	>100
	VGD40.065	125	668	125	290	97	211	-	DN65	Filter DN65	290	212	-
	VGD40.080	125	668	125	310	102	218	-	DN80	Filter DN80	320	240	-
	VGD40.100	125	560	255	350	113,5	229	-	DN100	Filter DN100	380	280	-
	VGD40.125	125	718	164	400	127,5	243	-	DN125	Filter DN125	380	280	-
Gas: **TS 8000.1, 10000.1** Dual fuel: **TS 800.1, 1000.1**	VGD40.065	202	820	108	290	97	211	-	DN65	Filter DN65	290	212	-
	VGD40.080	221	820	129	310	102	218	-	DN80	Filter DN80	320	240	-
	VGD40.100	165	820	165	350	113,5	229	-	DN100	Filter DN100	380	280	-
	VGD40.125	165	820	441	400	127,5	243	-	DN125	Filter DN125	380	280	-
Gas: **TS 12000.1** Dual fuel: **TS 1200.1**	VGD40.080	221	820	129	310	102	218	-	DN80	Filter DN80	320	240	-
	VGD40.100	165	820	165	350	113,5	229	-	DN100	Filter DN100	380	280	-
	VGD40.125	165	820	441	400	127,5	243	-	DN125	Filter DN125	380	280	-
Gas: **TS 18000.1** Dual fuel: **TS 1800.1**	VGD40.080	221	820	129	310	102	218	-	DN80	Filter DN80	320	240	-
	VGD40.100	165	820	165	350	113,5	229	-	DN100	Filter DN100	380	280	-
	VGD40.125	165	820	441	400	127,5	243	-	DN125	Filter DN125	380	280	-
Gas: **TS 23000.1** Dual fuel: **TS 2300.1**	VGD40.100	165	820	165	350	113,5	229	-	DN100	Filter DN100	380	280	-
	VGD40.125	165	820	441	400	127,5	243	-	DN125	Filter DN125	380	280	
Gas: **TS 34000.1** Dual fuel: **TS 3400.1**	VGD40.100	165	820	165	350	113,5	229	-	DN100	Filter DN100	380	280	-
	VGD40.125	165	820	441	400	127,5	243	-	DN125	Filter DN125	380	280	

Flame lenght (gas burners)

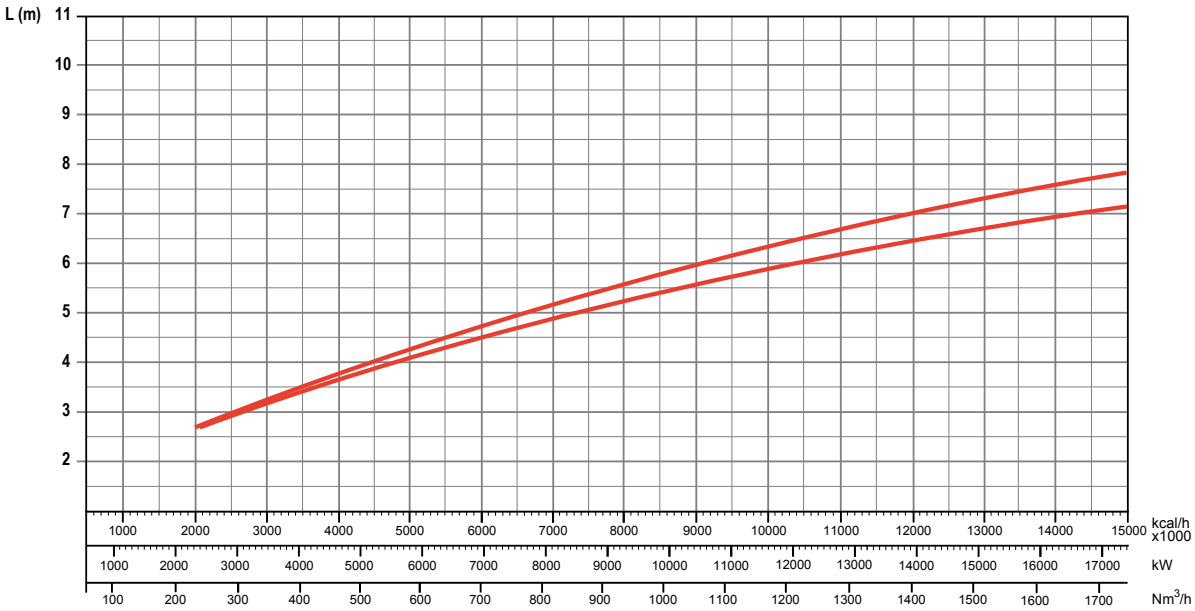

Flame diameter (gas burners)

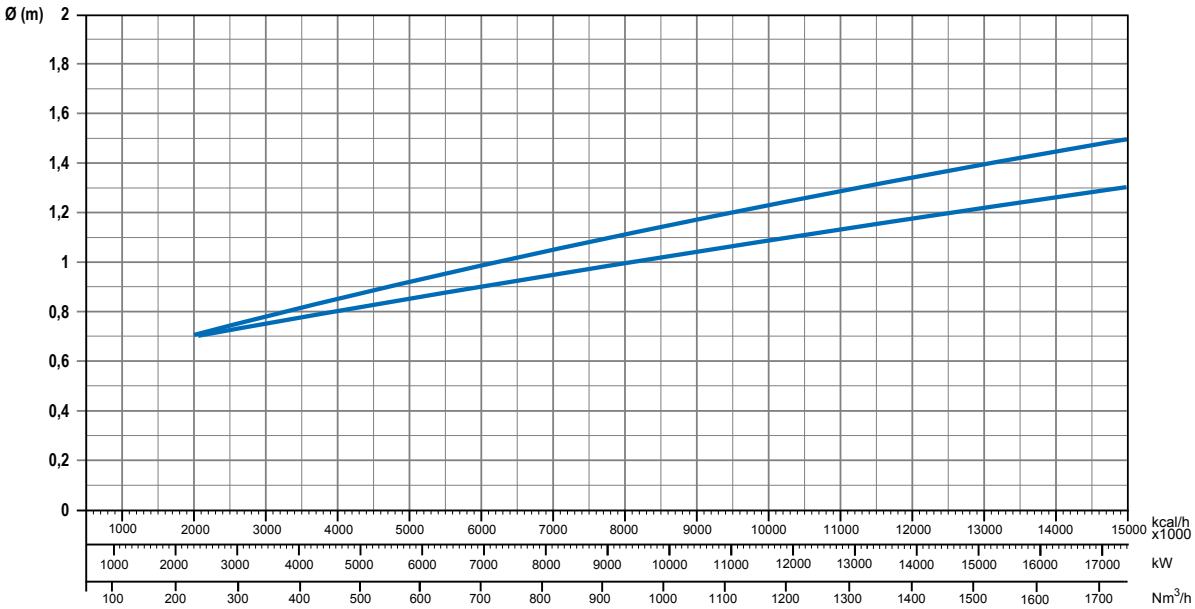

Data may vary depending on the configuration of the burner, the pressure of the combustion chamber and the draught.
The values in the graphs refer to tests carried out with flame tubes.

Example:
Burner output: 8000 kW
L flame (m) = 5 (medium value)
D flame (m) = 1 (medium value)

Modifications to the flame can be made in our Flexshop in order to shape the flame and meet specific requirements for special boilers or applications

NOTES

Ecoflam

HEAD OFFICE:
Via Roma, 64
31023 Resana (TV)

REGISTERED OFFICE:
Viale A. Merloni, 45
60044 Fabriano (AN)

Tel.: +39 0423 719500
Fax: +39 0423 719580
Web: www.ecoflam-burners.com
Email: export@ecoflam-burners.com

Company subject to the direction and coordination of Ariston Thermo SpA.
Via A. Merloni, 45 - 60044 Fabriano (AN) - CF 01026940427

Version 2.2 - 25/08/2016